LAYER123
MEET : LEARN : EXCHANGE

ZERO TOUCH CONGRESS

Open Source MANO

OSM IN PRACTICE

Gerardo García (Telefónica), Technical Steering Committee

ETSI

OSM Release THREE Overall Architecture (OLD)

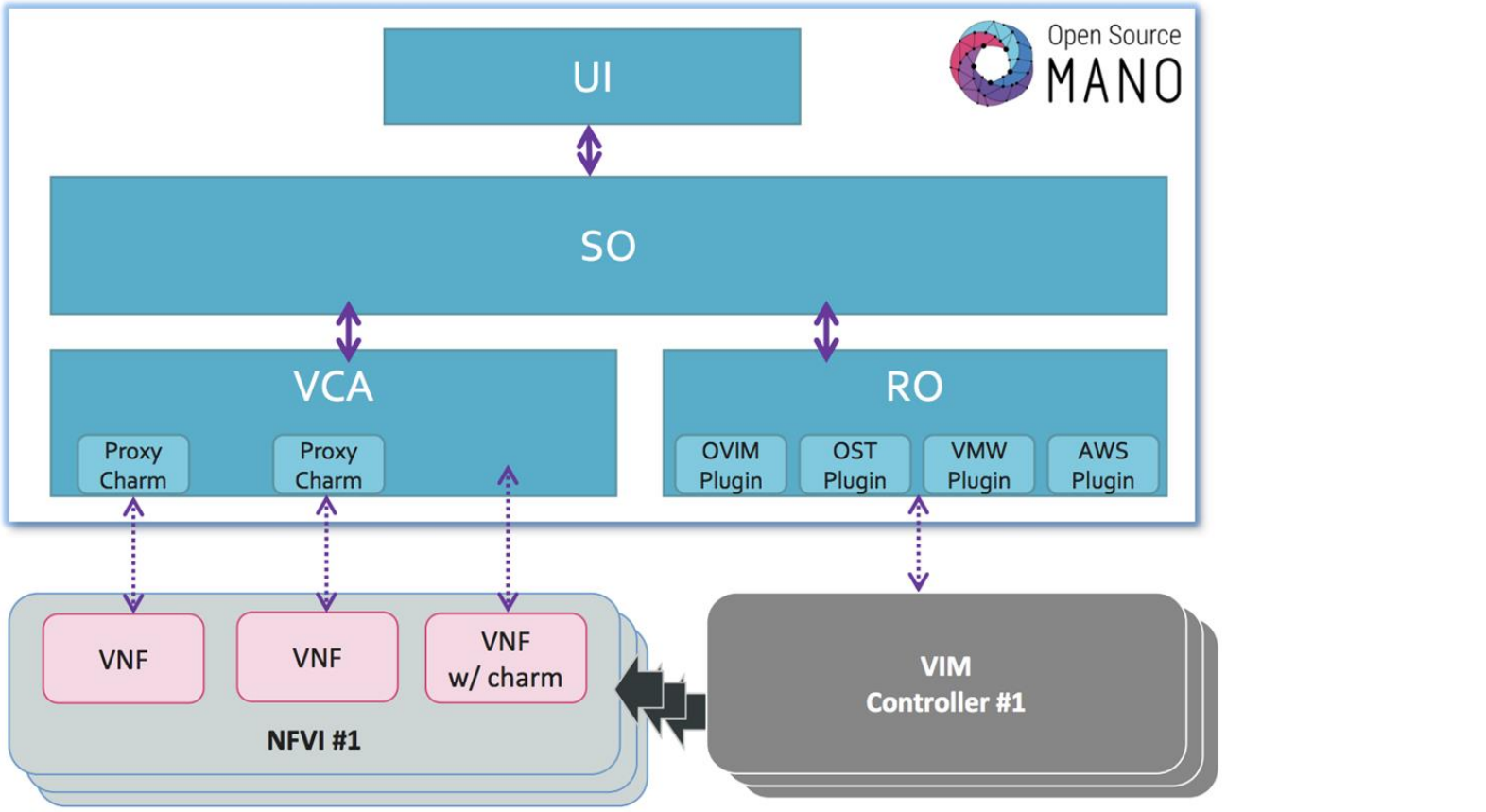

UI: User interface
SO: Service Orchestrator
VCA: VNF Configuration & Abstraction
RO: Resource Orchestrator

Highly functional, but with some opportunities for enhancement:

- NBI tightly coupled to SO
- Difficult to add new modules to extend functionality

Architectural decisions
1) Keep layered communication to VIMs and VNFs

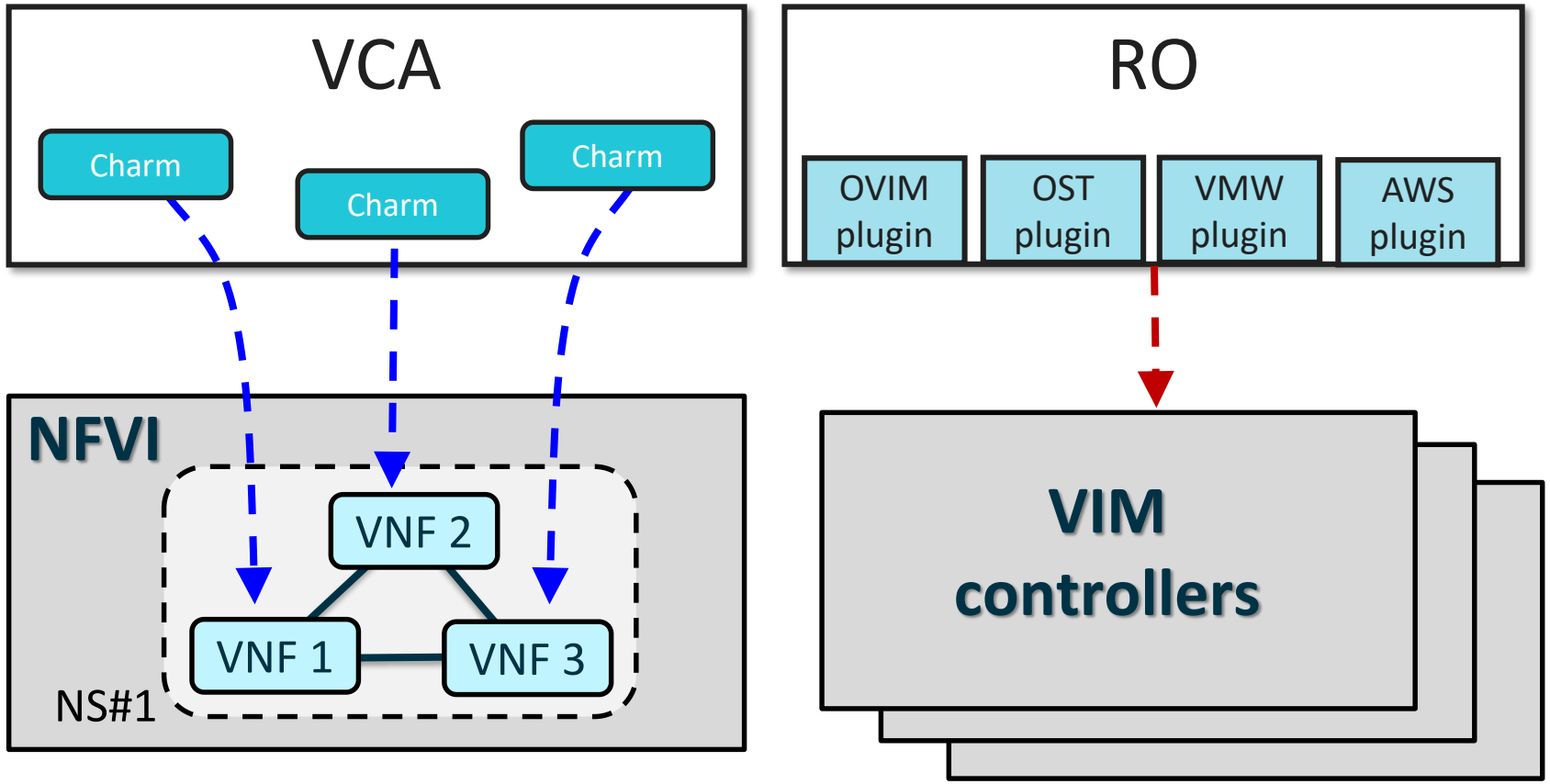

Architectural decisions
2) Decouple NBI from LCM

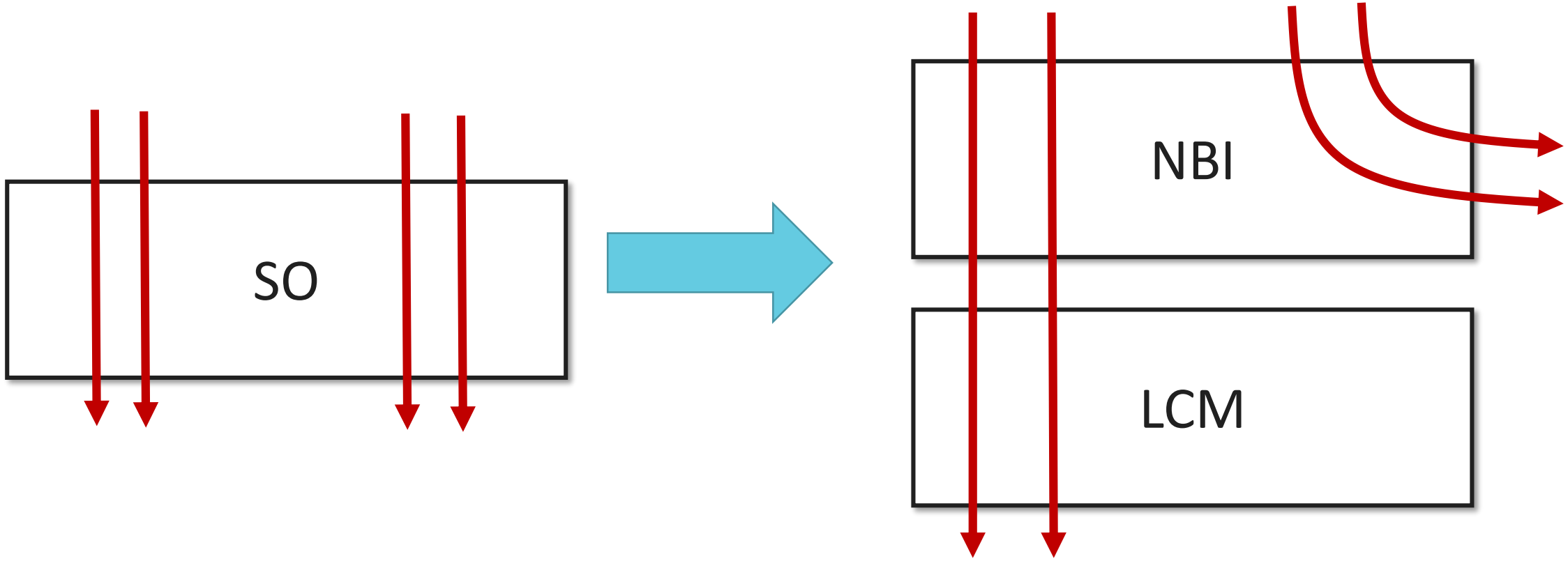

Architectural decisions
3) Message bus, common DB and object storage

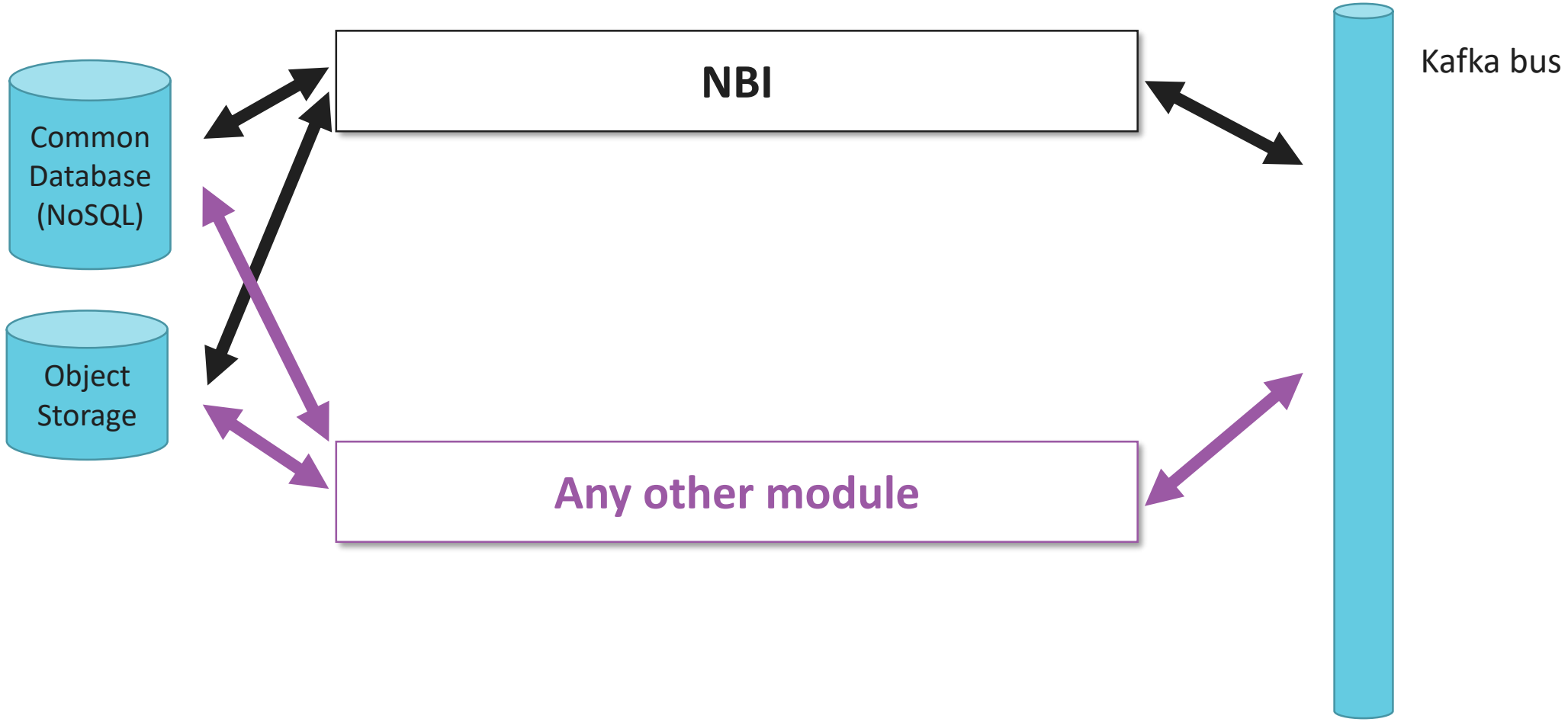

OSM Release FOUR Architecture

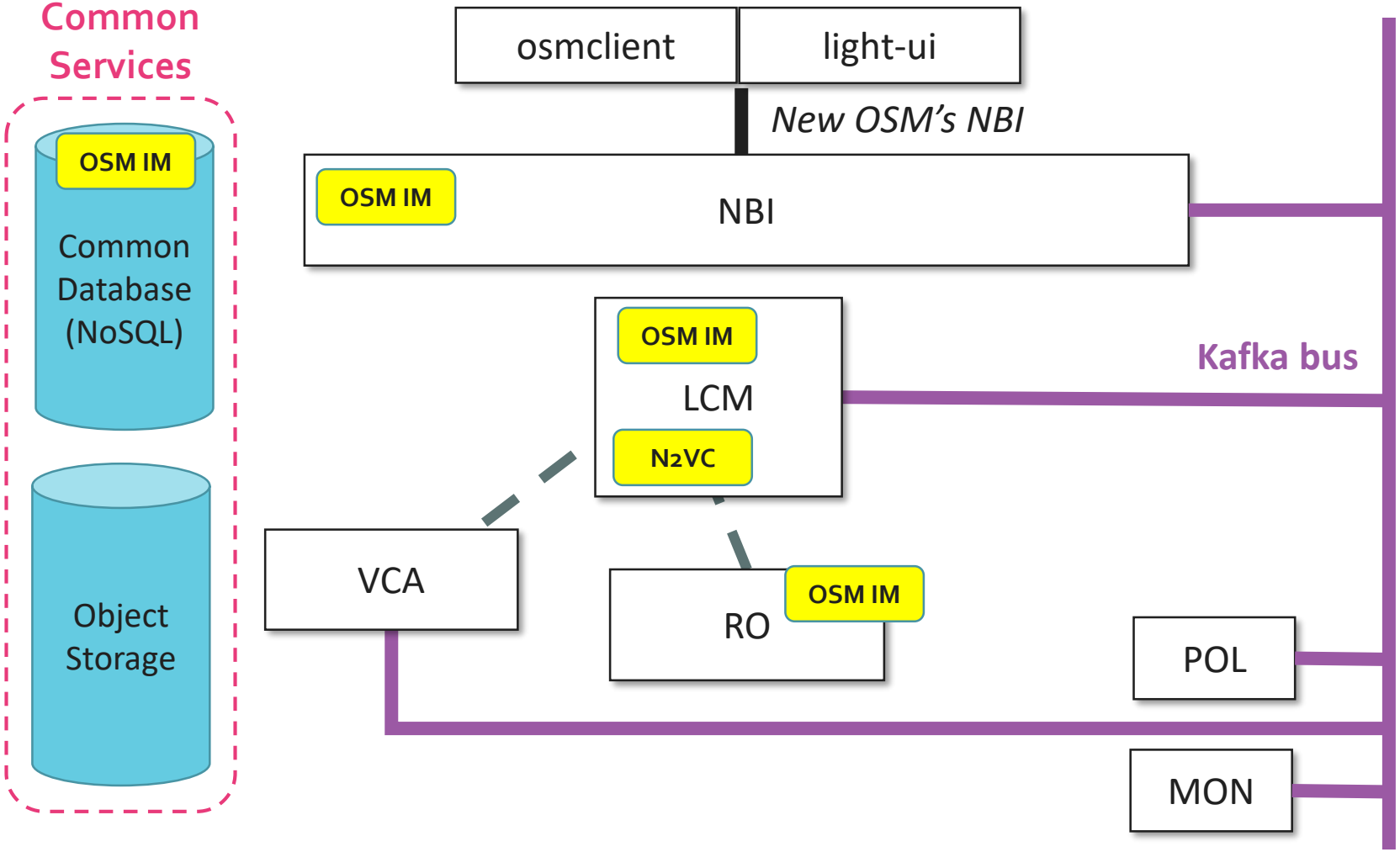

1. Unified Northbound Interface (SOL005-based), decoupled from LCM
2. Lightweight Life Cycle Manager (LCM)
3. Message bus for async communications
4. Common DB and object storage
5. Integrated components for policy, fault and performance management
6. Complete control through CLI and stand-alone new UI

Microservice architecture to enable extensibility (OSM Release FOUR)

Open Source MANO

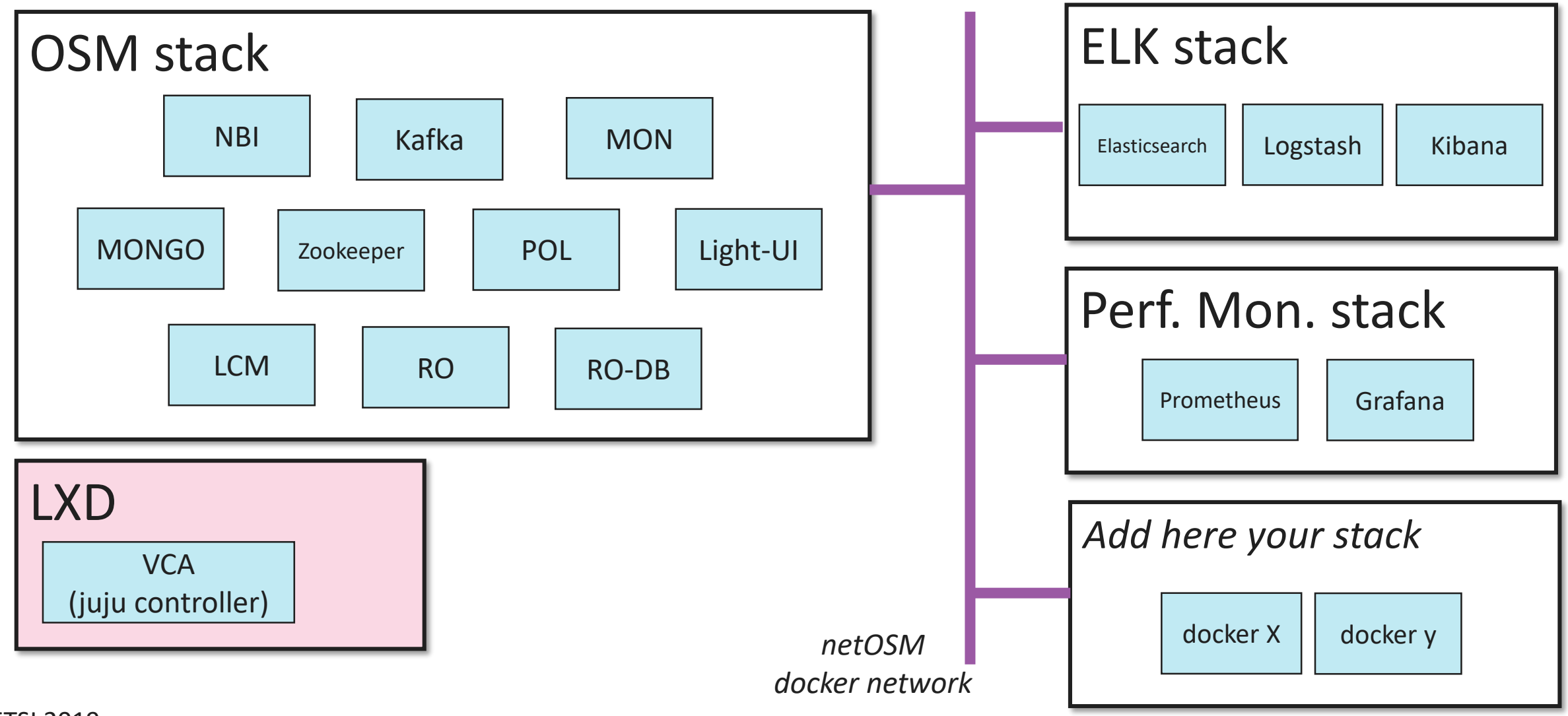

Microservice architecture in OSM Release FIVE

Open Source MANO

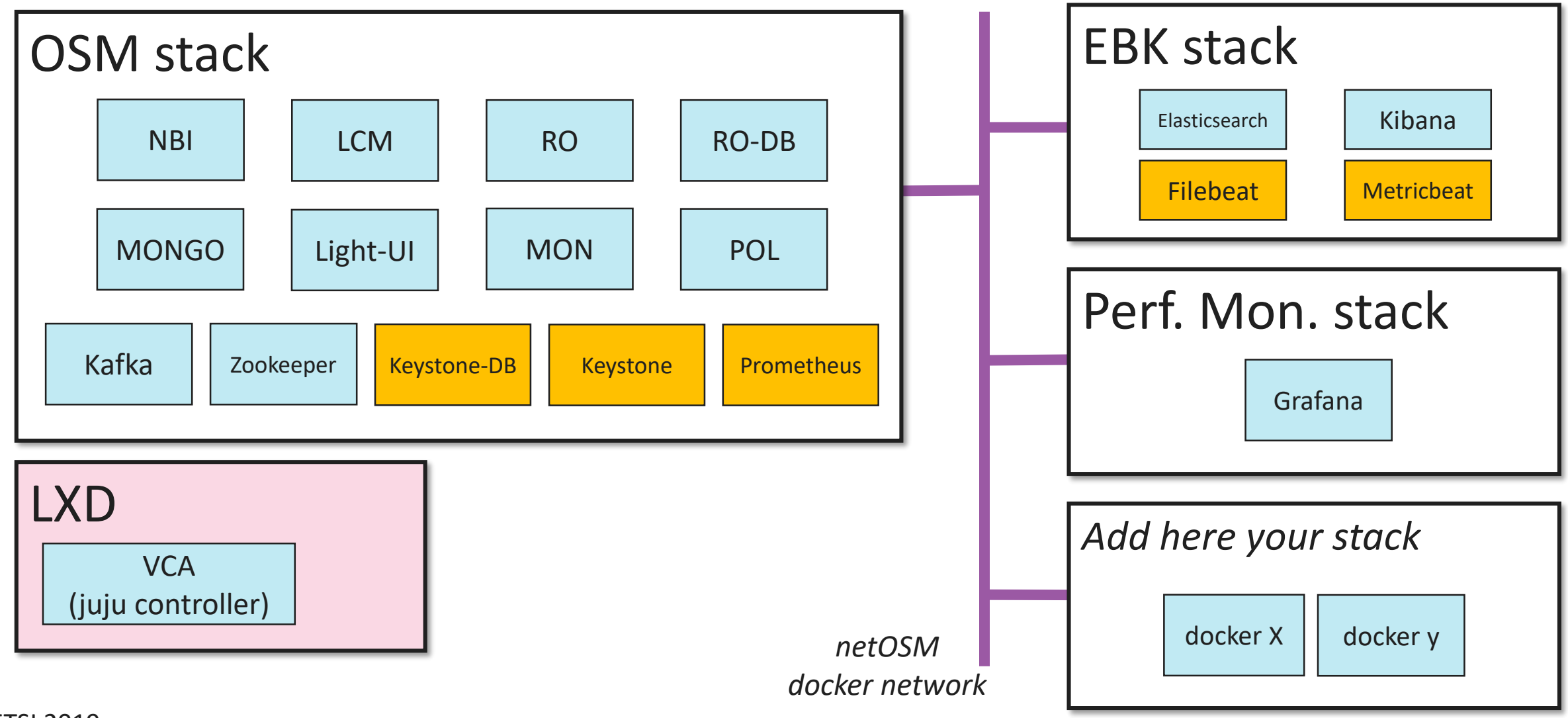

OSM Release FIVE Architecture

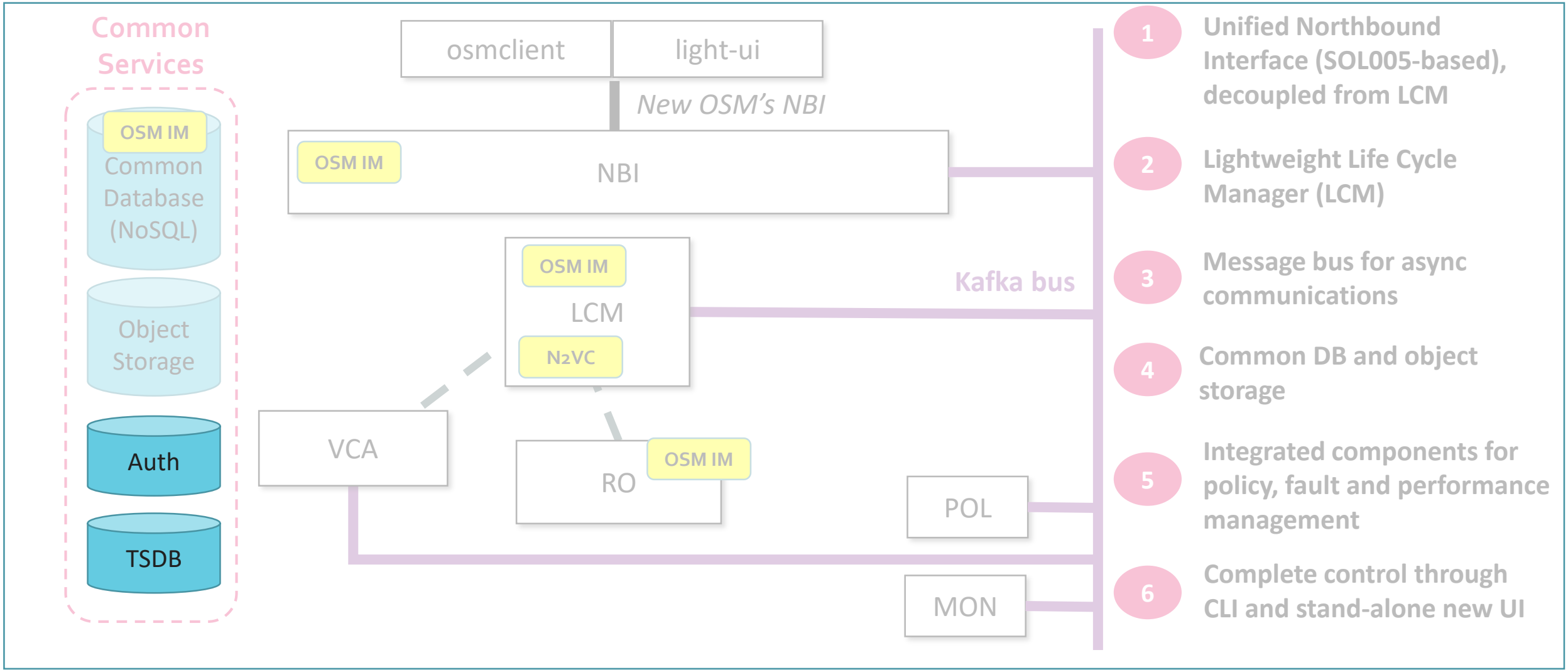

Extending the plugin model to other modules

Open Source MANO

RO

- OVIM plugin
- OST plugin
- VMW plugin
- AWS plugin
- ODL plugin
- ONOS plugin
- Floodl. plugin
- ODL WIM plugin
- TAPI plugin

Message bus

- FS plugin
- Kafka plugin

Object Storage

- FS plugin
- Ceph plugin

MON

- OST plugin
- VMW plugin
- AWS plugin
- VNF metrics plugin

Common DB

- FS plugin
- MONGO plugin

NBI RBAC

- Keystone plugin

Multiple distribution formats

- Installer script (dockers or source code)
- Dockers: https://hub.docker.com/u/opensourcemano/
  - Tag ‘latest’ for latest stable docker images
  - Tag ‘releasefive-daily’ for daily docker images
- Vagrant: https://app.vagrantup.com/osm
  - Latest Vagrant image: osm/releasefive
- Debian packages:
  - Testing: http://osm-download.etsi.org/repository/osm/debian/ReleaseFIVE-daily/
  - Stable: http://osm-download.etsi.org/repository/osm/debian/ReleaseFIVE
- Source code:
  - Gitweb: https://osm.etsi.org/gitweb/
  - Gerrit: https://osm.etsi.org/gerrit/#/admin/projects/

From design to operation

Open Source MANO

Design → Onboarding → Instantiation → NS LCM → Service Operation

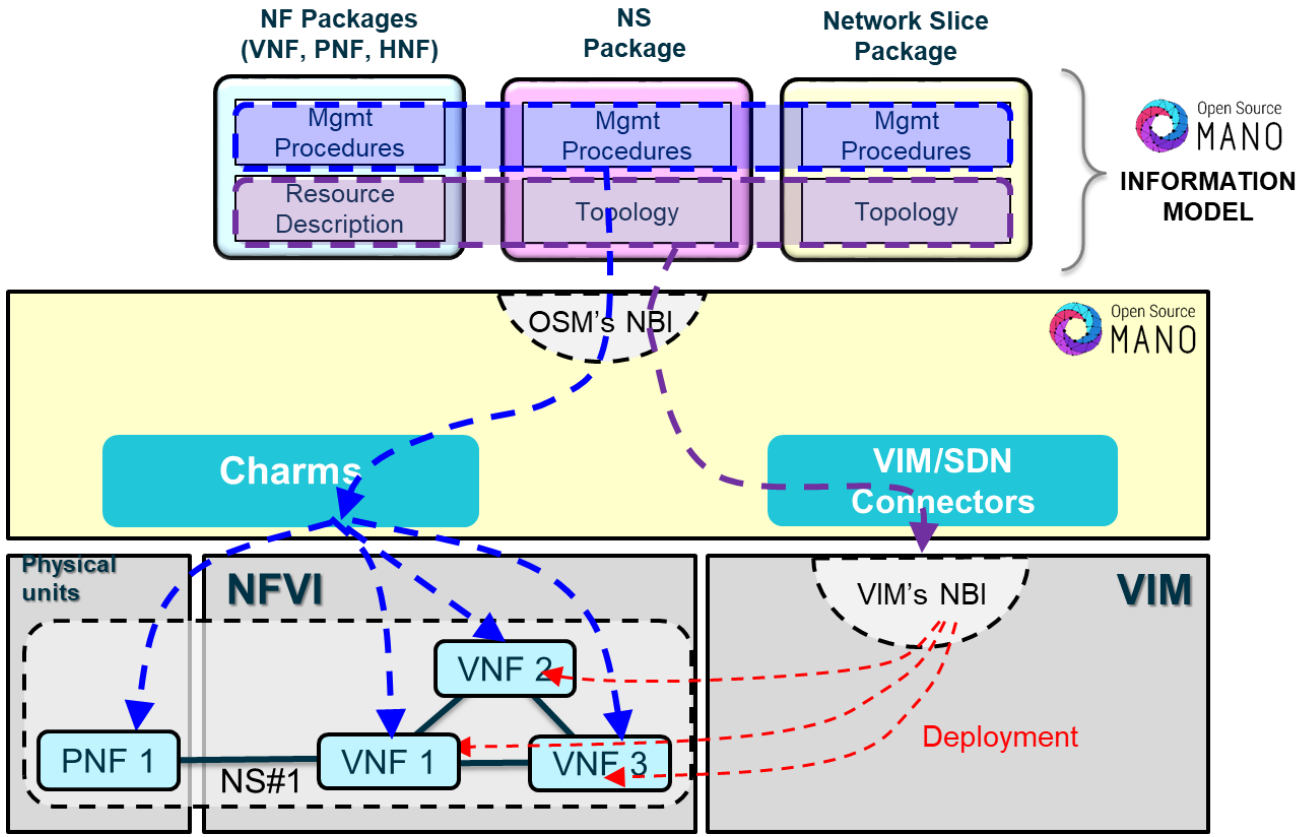

Design

Descriptors and packages, result of the design phase

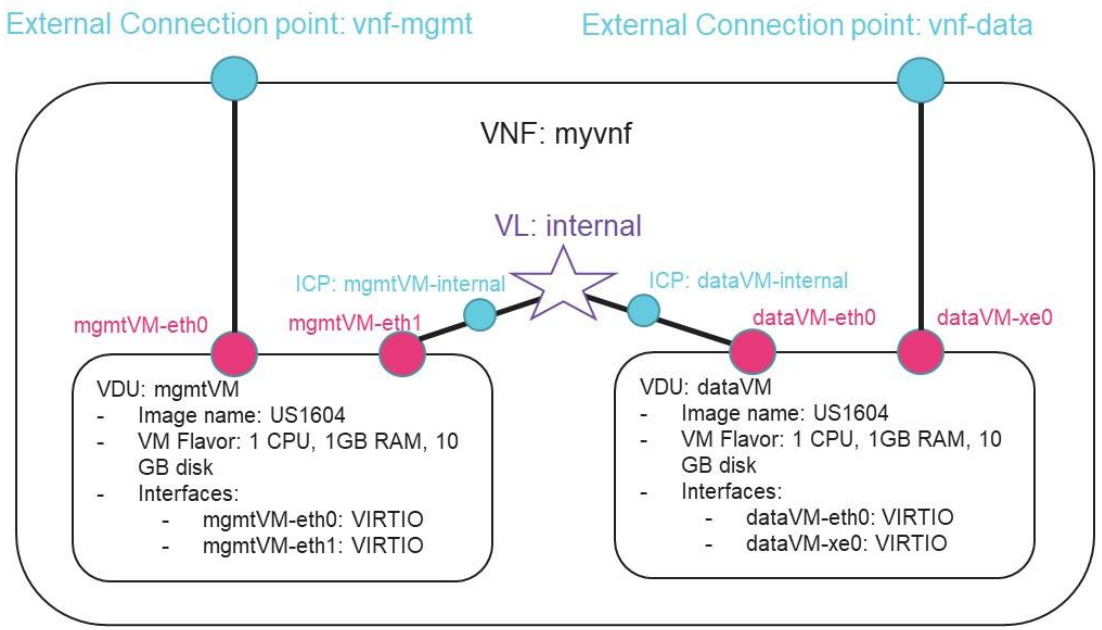

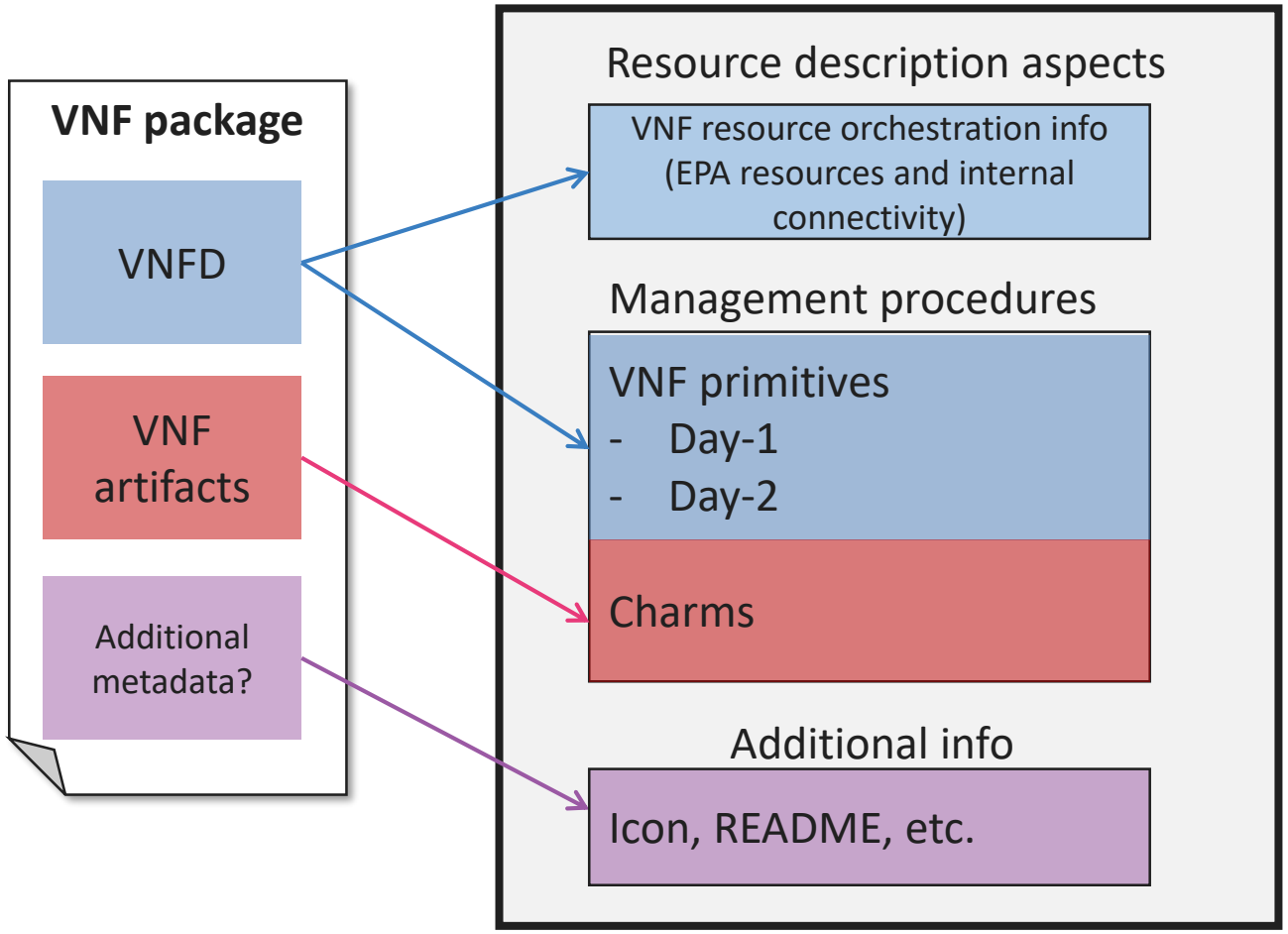

Design

Descriptors and packages, result of the design phase

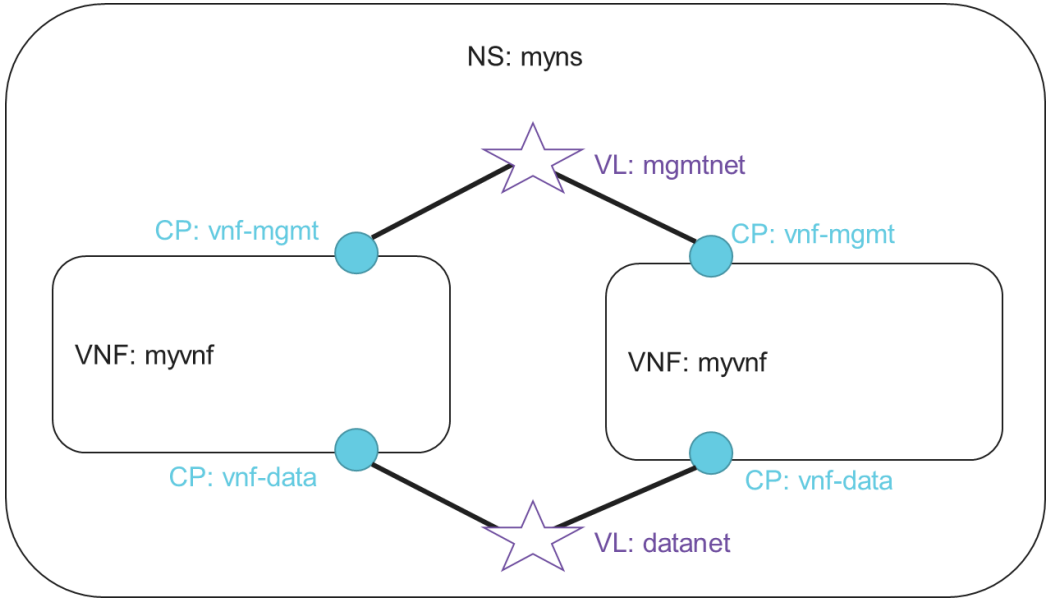

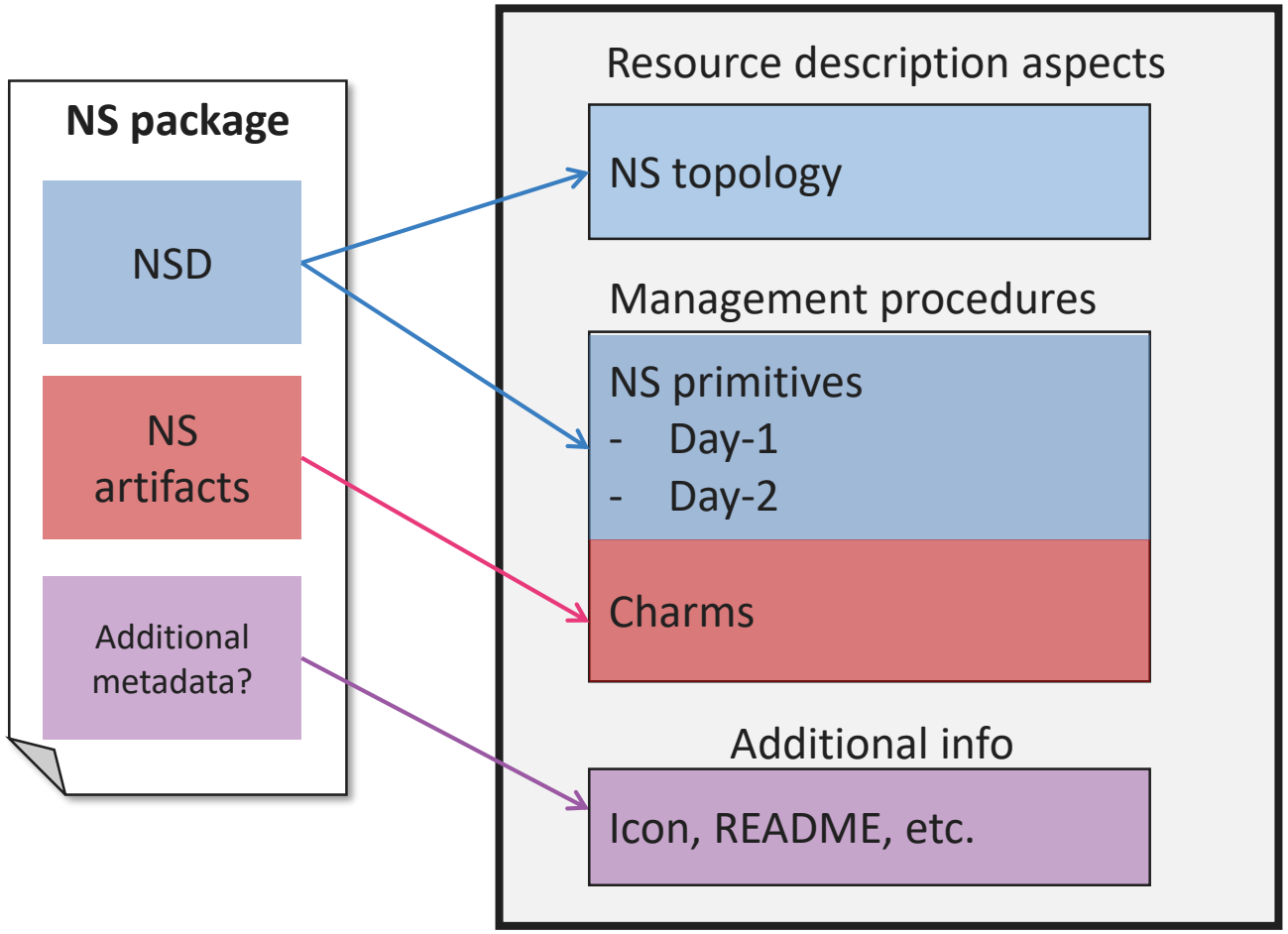

Design
What is a charm?

- A charm is a programmatic wrapping of the primitives
  - VNF charm -> VNF primitives
  - NS charm -> NS primitives
- Types of charms:
  - Proxy charms: run in LXD containers in the OSM host
  - Native charms: run in the VNF
- Proxy charms provide an abstraction layer that hides the complexity of the implementation behind

Demystifying charms
Mapping charms to descriptors

Open Source MANO

Descriptor

```
vnfd:
    ...
    vnf-configuration:
        juju:
            charm: vendor-epc
    config-primitive:
        -   name: new-pcrf
            parameter:
            ...
        -   name: new-hss
            parameter:
            ...
        -   name: new-ippool
            parameter:
            ...
        -   name: new-apn
            parameter:
            ...
        -   name: full-config
            parameter:
            ...
```

Charm

actions.yaml

```
new-pcrf:
    description: ...
    params: ...
new-hss:
    description: ...
    params: ...
new-ippool:
    description: ...
    params: ...
new-apn:
    description: ...
    params: ...
full-config:
    description: ...
    params: ...
```

reactive/charm.py

```
@when('actions.new-hss')
def newHSS():
    ...
    hss_ip = action_get('hss_ip')
    ...
    cmd = "add_hss.sh " + hss_ip
    result, err = charms.sshproxy._run(cmd)
    ...

@when('actions.new-apn')
def newAPN():
    ...
    apn_name = action_get('apn_name')
    ...
    jsondata = {'name': apn_name}
    url = "https://" + epc_mgmt_ip + "api/new-apn"
    r = requests.post(url, jsondata)
    ...

@when('actions.full-config')
def fullConfig():
    ...
    #createFullConfigFileFromParams
    #copyFileToHTTPserver
    cmd = "apply_full_config " + url
    result, err = charms.sshproxy._run(cmd)
```

Onboarding

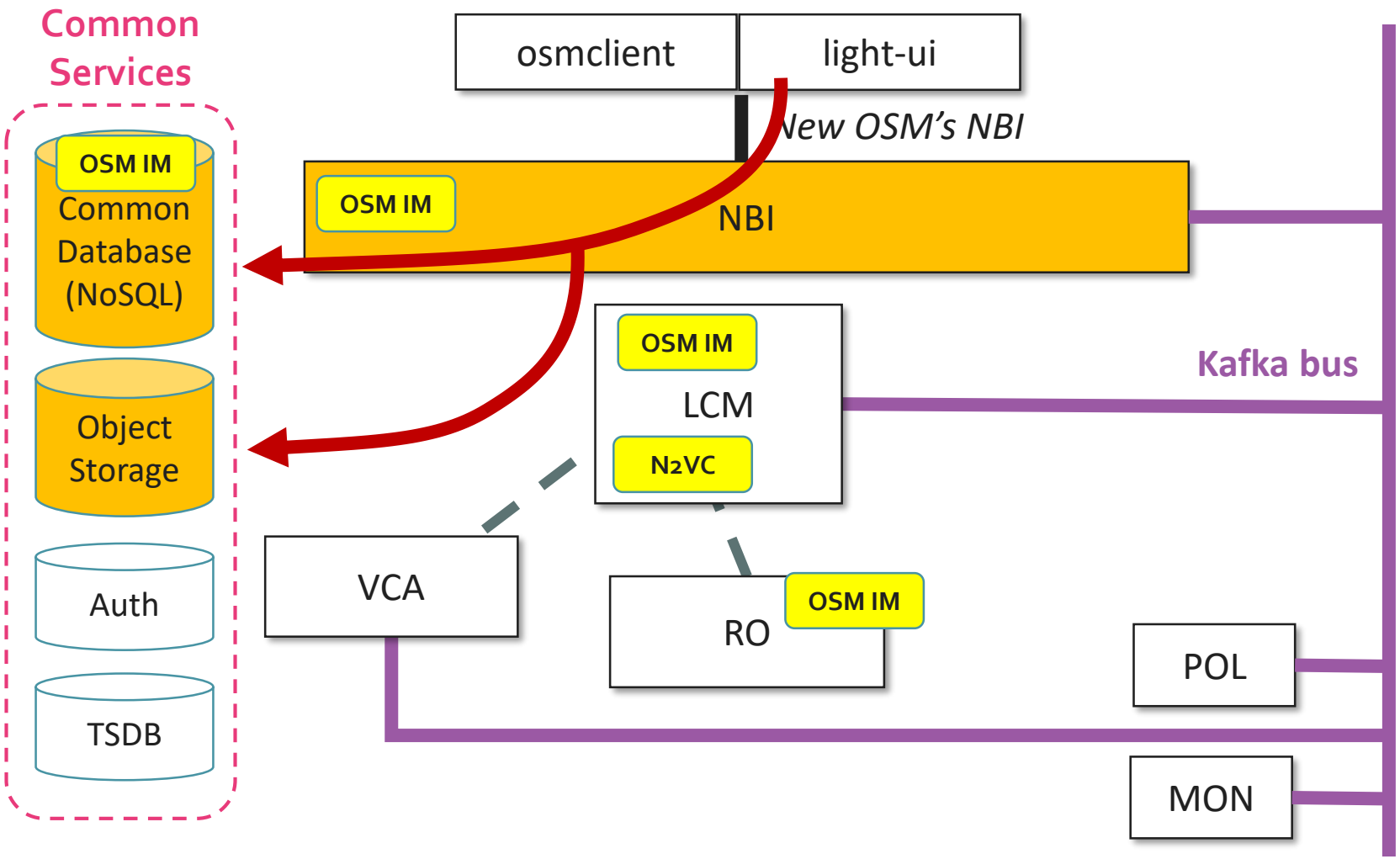

CRUD operations over VNF and NS packages go directly to the Common DB and Object storage, without travelling through the Kafka bus

Read operations

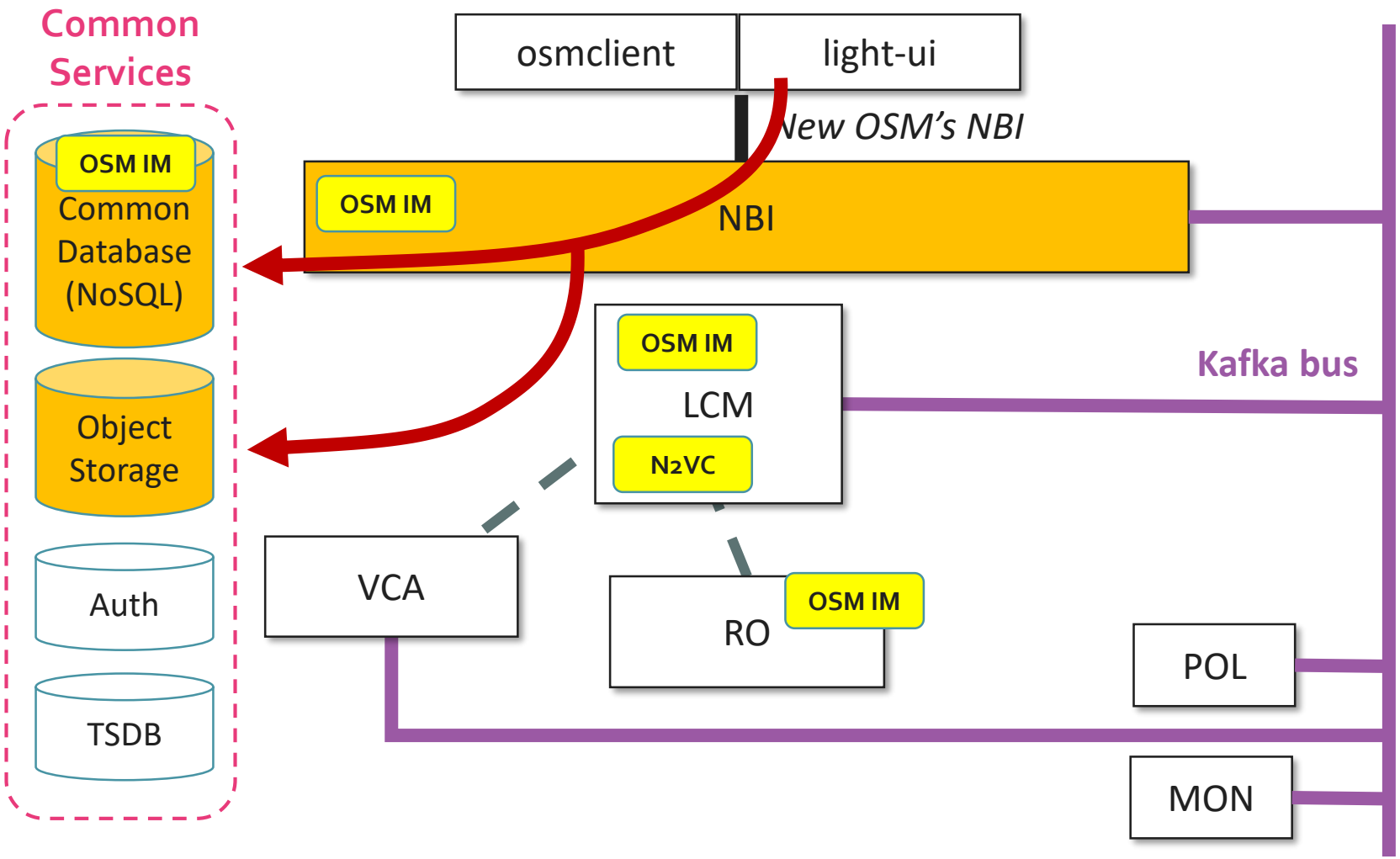

Listing the available VNF and NS packages

NS instantiation
Deployment and day-0 configuration

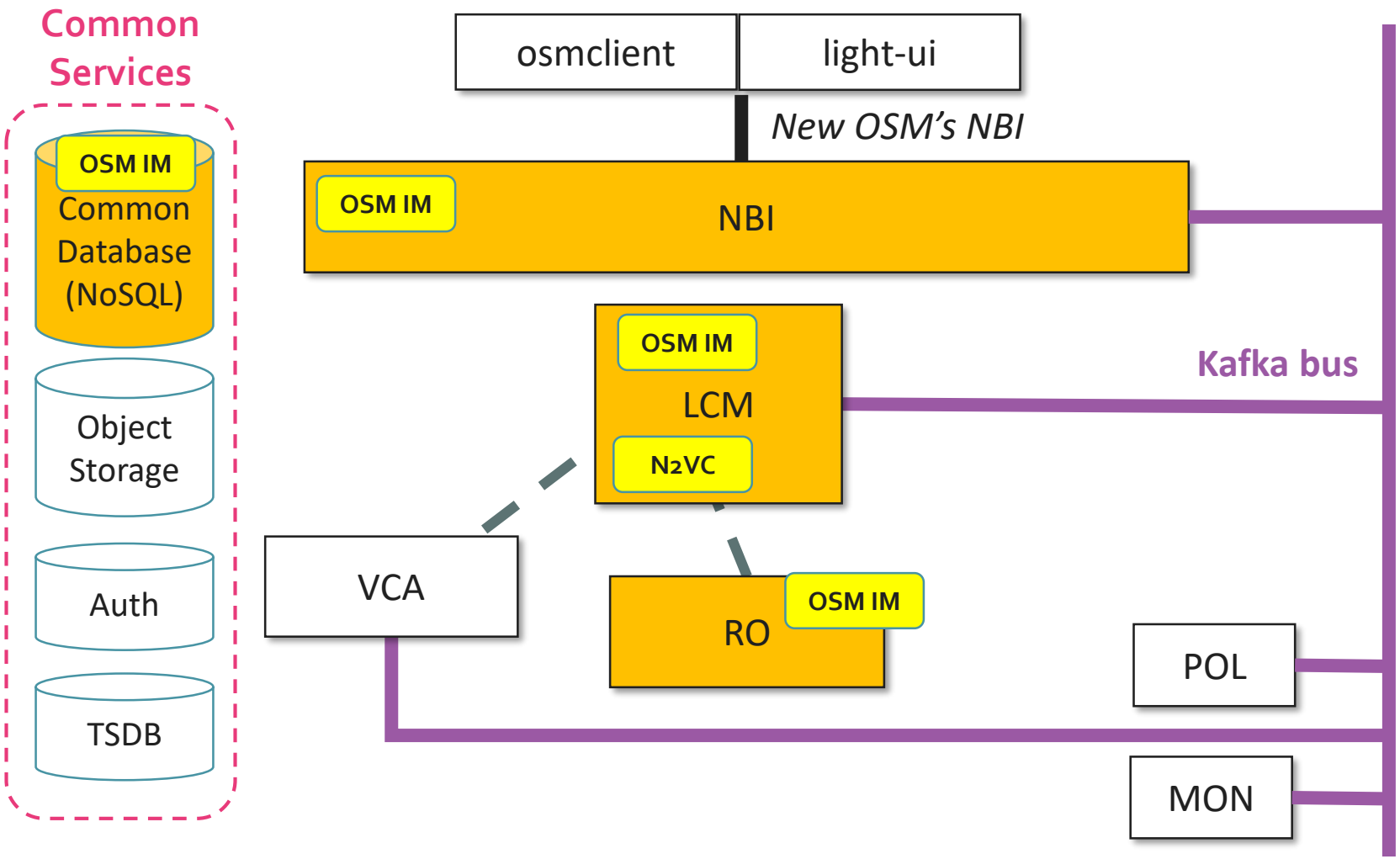

1. ***NBI creates record in common DB***
2. ***NBI publishes message in Kafka: instantiate NS_id***
3. ***LCM consumes the message and deploys the NS***
4. ***Deployment and day-0 configuration***
5. ***Day-1 configuration (parametrized)***

NS instantiation
Day-1 configuration

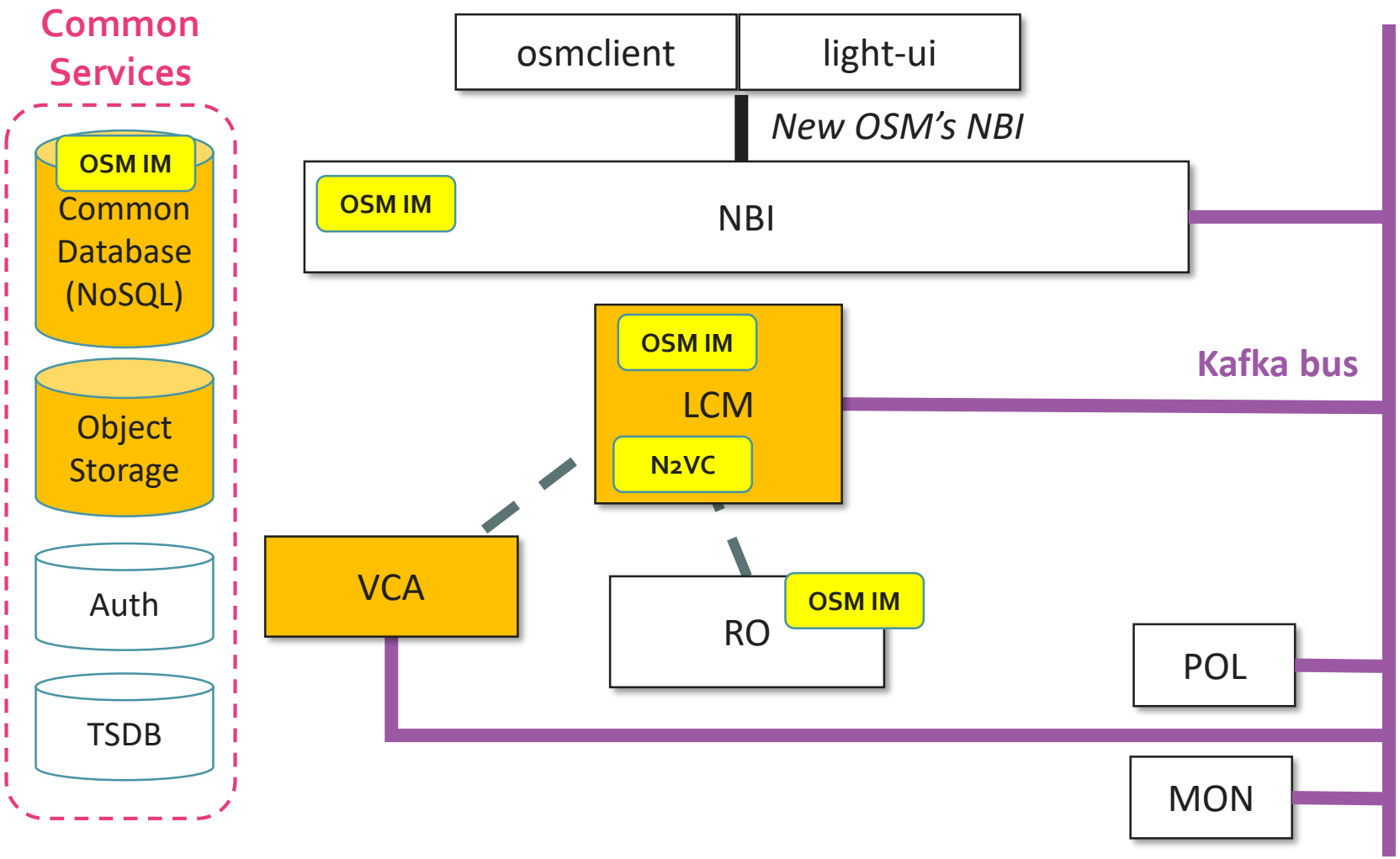

1. ***NBI creates record in common DB***
2. ***NBI publishes message in Kafka: instantiate NS_id***
3. ***LCM consumes the message and deploys the NS***
4. ***Deployment and day-0 configuration***
5. ***Day-1 configuration (parametrized)***

Service operation (day-2)

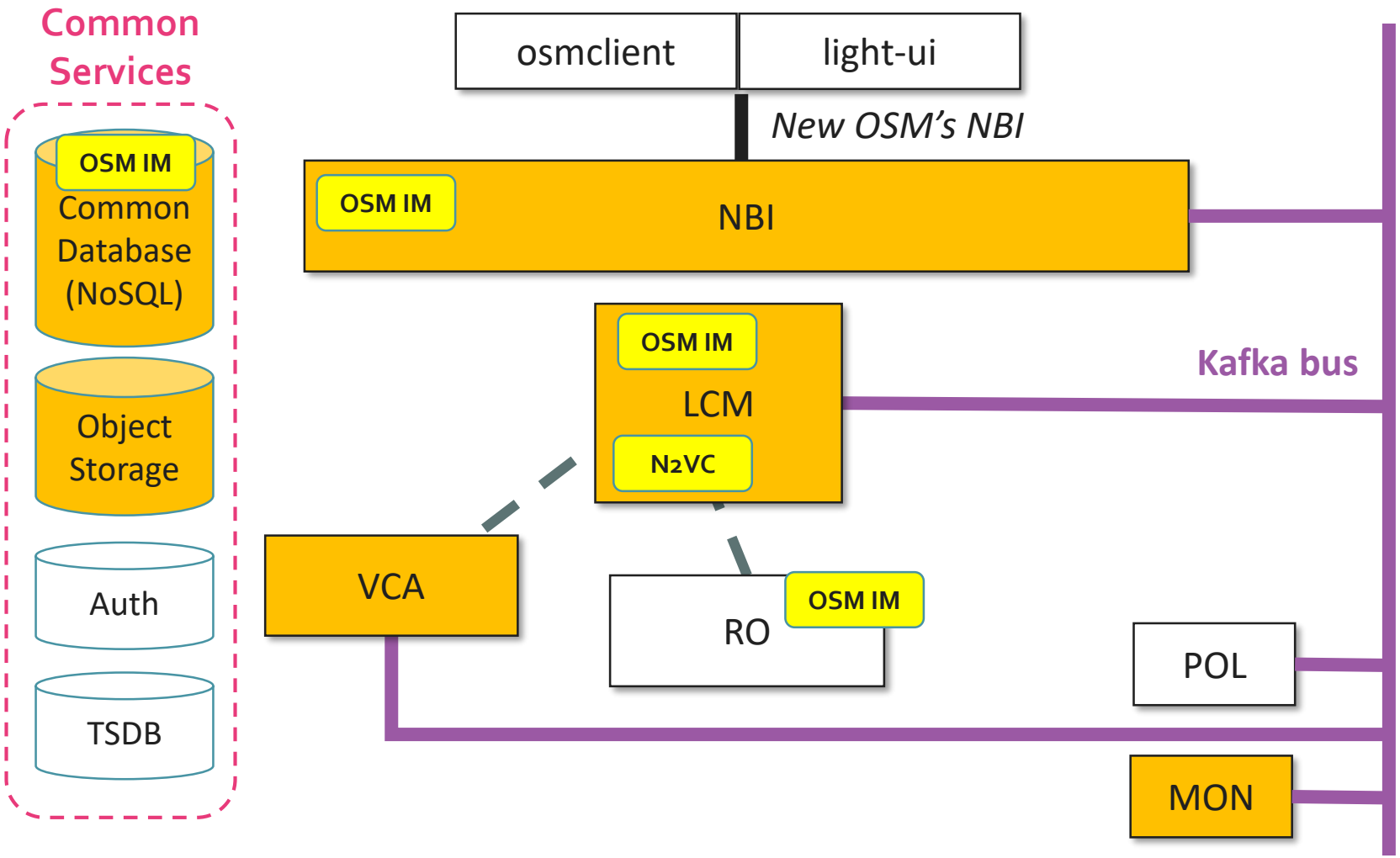

1. ***NBI publishes message in Kafka***
2. ***Consumer module depends on the specific primitive (day-2 operation primitives are consumed by LCM, on-demand metric export and alarm configuration are consumed by MON.***

Open Source MANO

Demo 1: onboarding and instantiation

OSM PoC framework

- The Open Source Mano community encourages members to design and deploy Proofs of Concept (PoCs) that are:
  - Relevant to contribute to further development of OSM
  - Showcase OSM in real-world useful scenarios and use cases

- Multi-vendor and/or component PoCs are welcome

How to submit an official OSM PoC

- Have at least one member that is an active OSM member or participant
- Send a formal PoC proposal to the OSM_TECH mailing list with the purpose to
  - Inform the OSM community
  - Get feedback from the OSM community
- OSM TSC will acknowledge receipt of the proposal and communicate approval to the OSM_TECH mailing list.
- Send relevant information to OSM MARCOM for publishing on OSM website.
- Present PoC results in TECH meetings with the purpose to:
- Regularly provide updates to OSM community and get feedback
- Complete the PoC - videos and supporting documentation

For more details, see the OSM wiki at:
https://osm.etsi.org/wikipub/index.php/OSM_PoC_Framework

List of OSM PoCs

- OSM PoC#1 - DevOps in Service Chains & 5G Network Slices
  - PoC Team Members: Netrounds, Telenor, Intel, RIFT.io, Arctos Labs
- OSM PoC#2 - OSM with VMware Integrated Openstack in MEC architectures
  - PoC Team Members: VMware, RIFT.io, Fortinet, DataArt
- OSM PoC#3 - Heimdall Hybrid Web: Orchestrating enterprise web 5G vertical scenario
  - PoC Team Members: IT Aveiro, Universidade de Aveiro, Universidade Federal do Rio Grande, Wavecom
- OSM PoC#4 - Charmed Open5GCore Deployment with OSM Rel FIVE
  - PoC Team Members: Canonical, TNO
- OSM PoC#5 - Placement of Workloads in Distributed Cloud Networks
  - PoC Team Members: Arctos Labs, Netrounds, WindRiver, Telenor
- OSM PoC#6 - 5G Network Slice Orchestration with OSM
  - PoC Team Members: Telefonica, Telenor, Intel, Mavenir, Oracle, Ixia, Indra, Altran, Tech Mahindra, RedHat

List of OSM PoCs: https://osm.etsi.org/wikipub/index.php/OSM_PoCs

PoC #6: 5G Network Slice Orchestration with OSM Objective

Deploy 2 Network Slices with some input parameters and operate them through Day-2 operations at Network Slice level

- ***Deployment****: Each slice is modeled as a set of Network Services connected by networks or VLDs*
  - *Simple input parameters determine the type of slice to be created on demand*
  - *The 2 slices share some Network Services (shared NS Subnets)*
    - *If the shared NS was already deployed, it won't be deployed again*
    - *It will be reused, but initial configuration for the second Network Slice can still be done in the shared NS to let it know that new elements are present.*

- ***Operation****: Running Day-2 primitives at Network Slice level (handled as a single object)*
  - *OSM, behind the scenes, maps them to a sequence of calls to NS primitives, which, in turn, are derived in calls to VNF primitives*

PoC #6: 5G Network Slice Orchestration with OSM
New concepts behind Network Slices

Open Source MANO

New construct for composition of NS

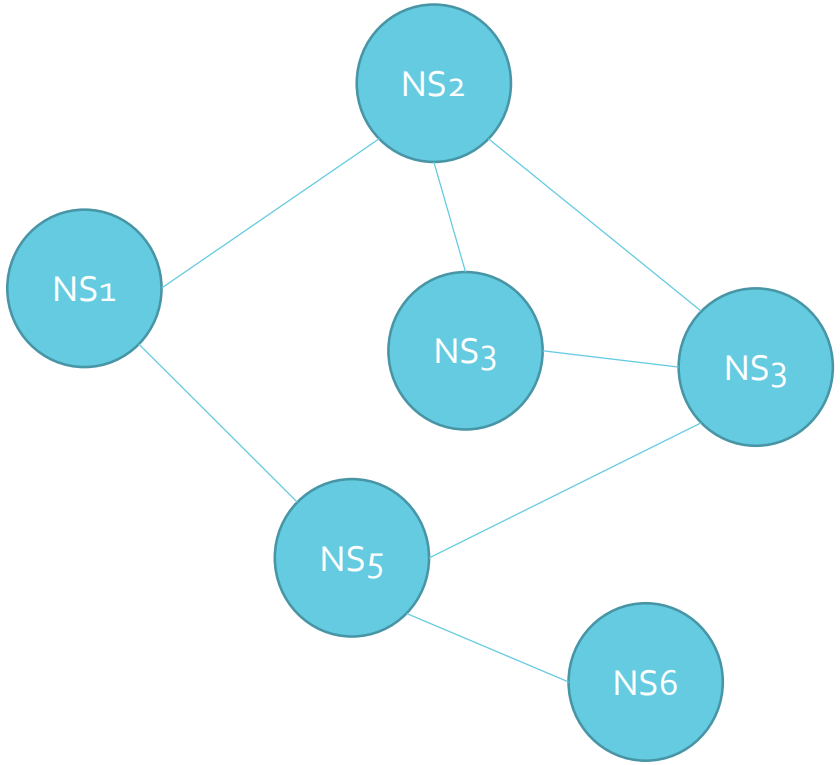

Shared/non-shared NS

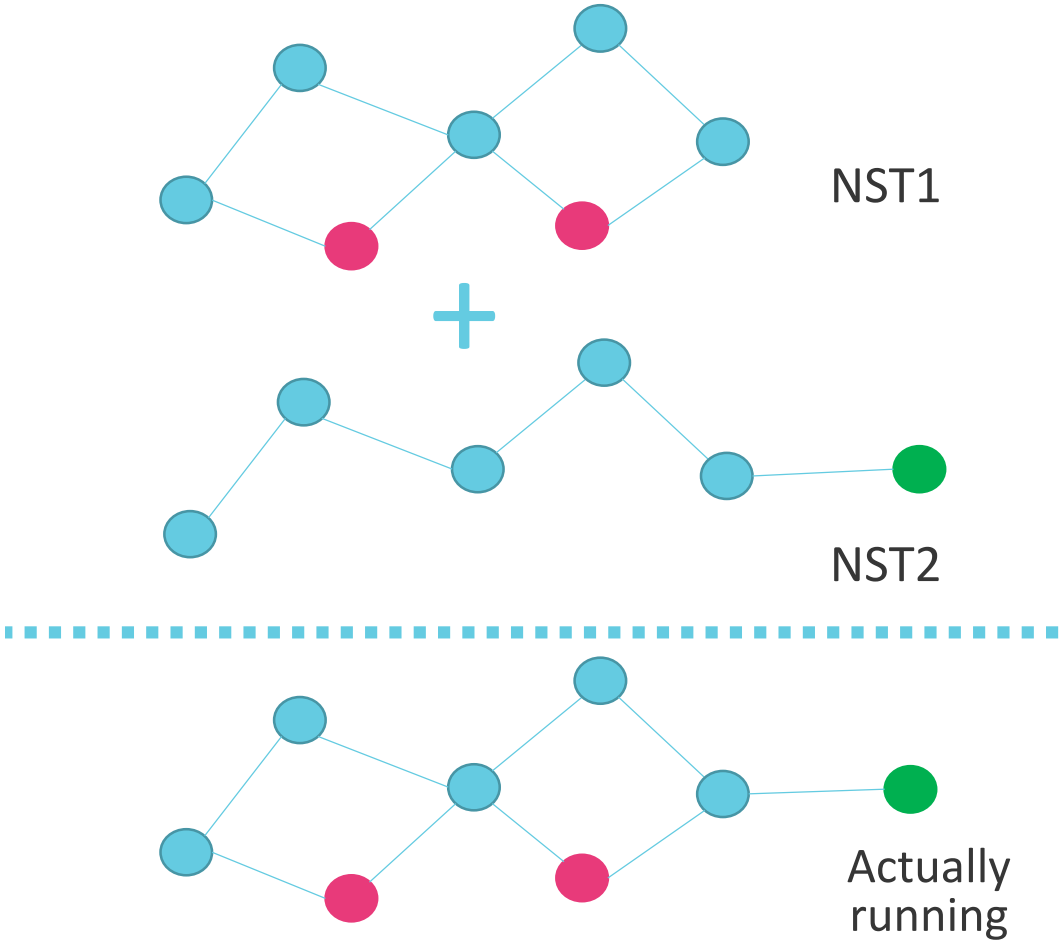

PoC #6: 5G Network Slice Orchestration with OSM
1st Network Slice: eMBB

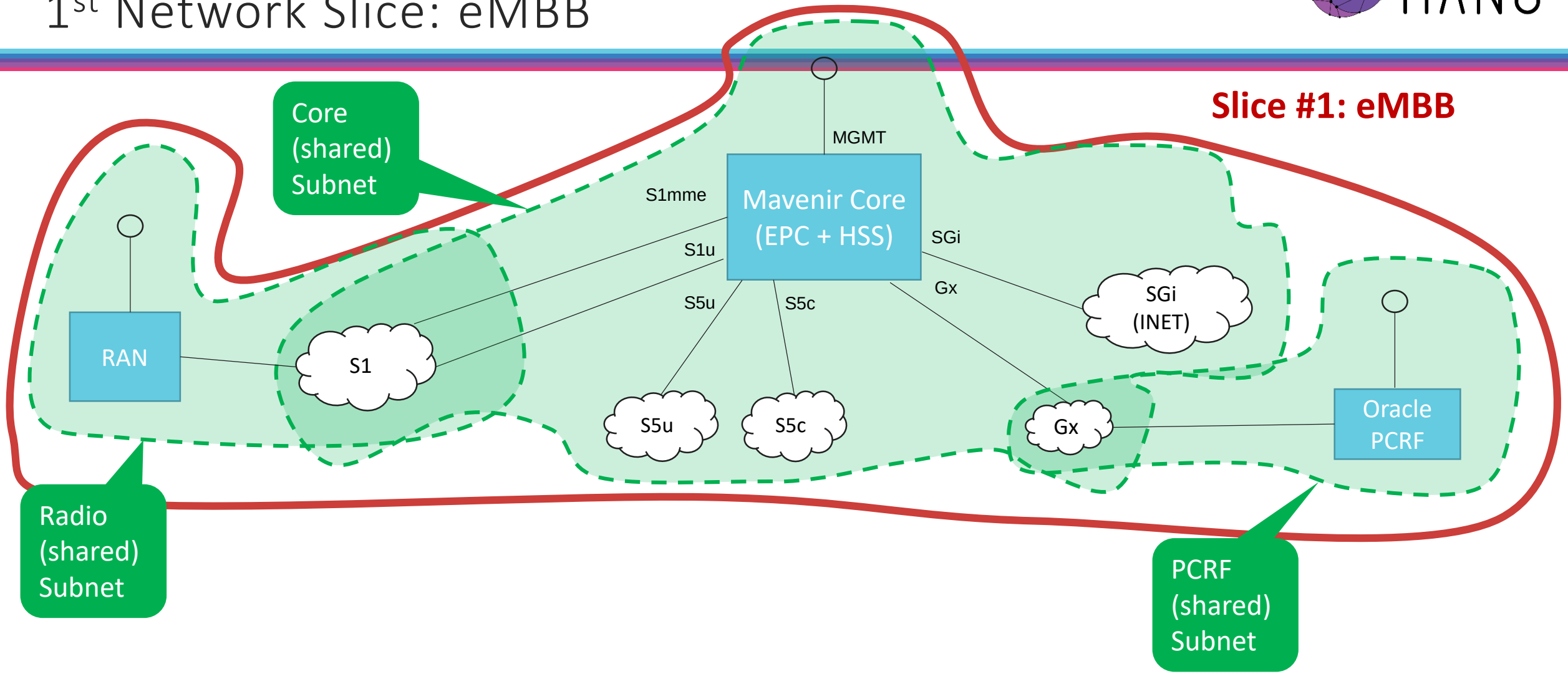

PoC #6: 5G Network Slice Orchestration with OSM
2nd Network Slice: URLLC

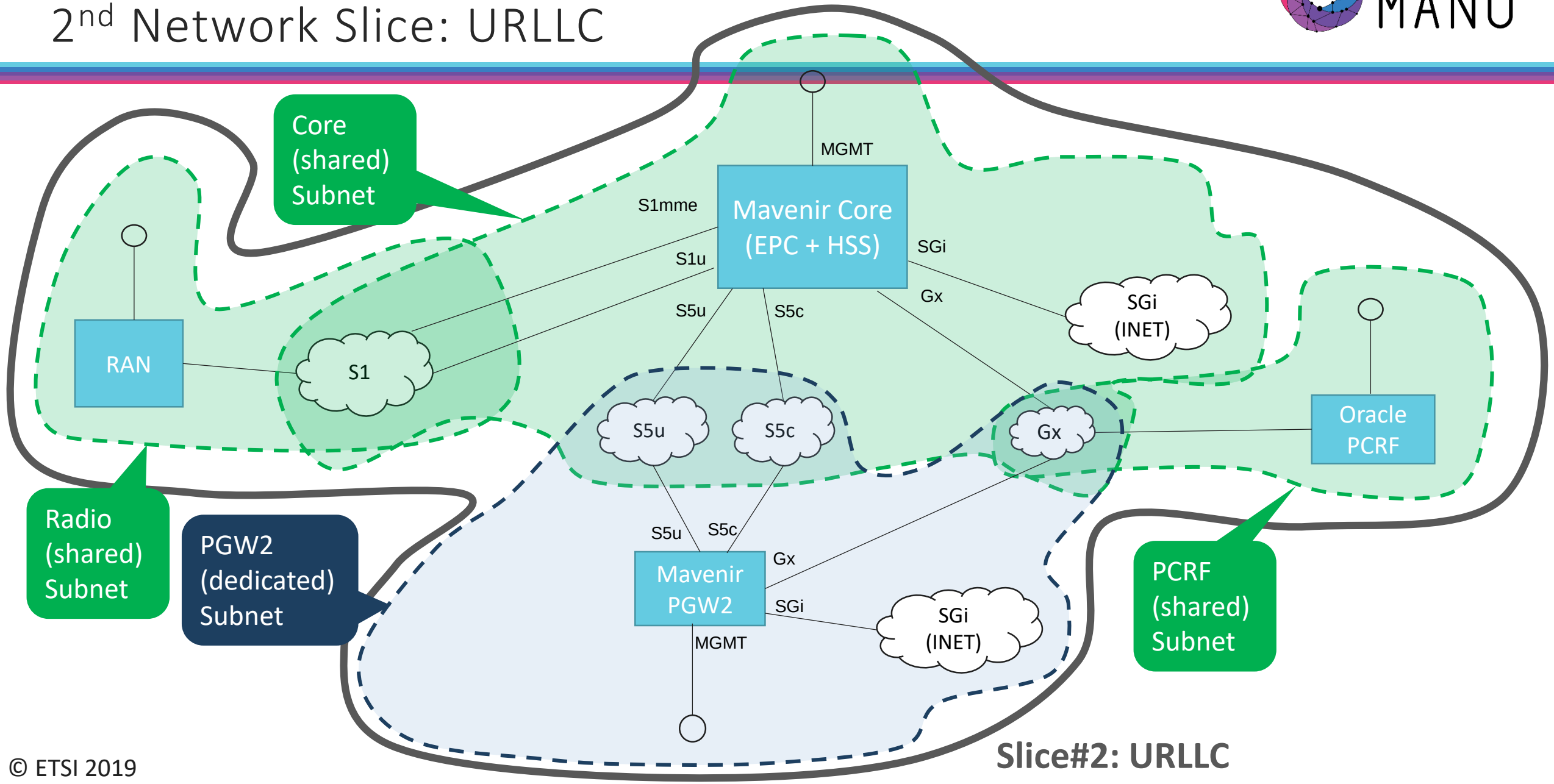

Seeing the full picture

Open Source MANO

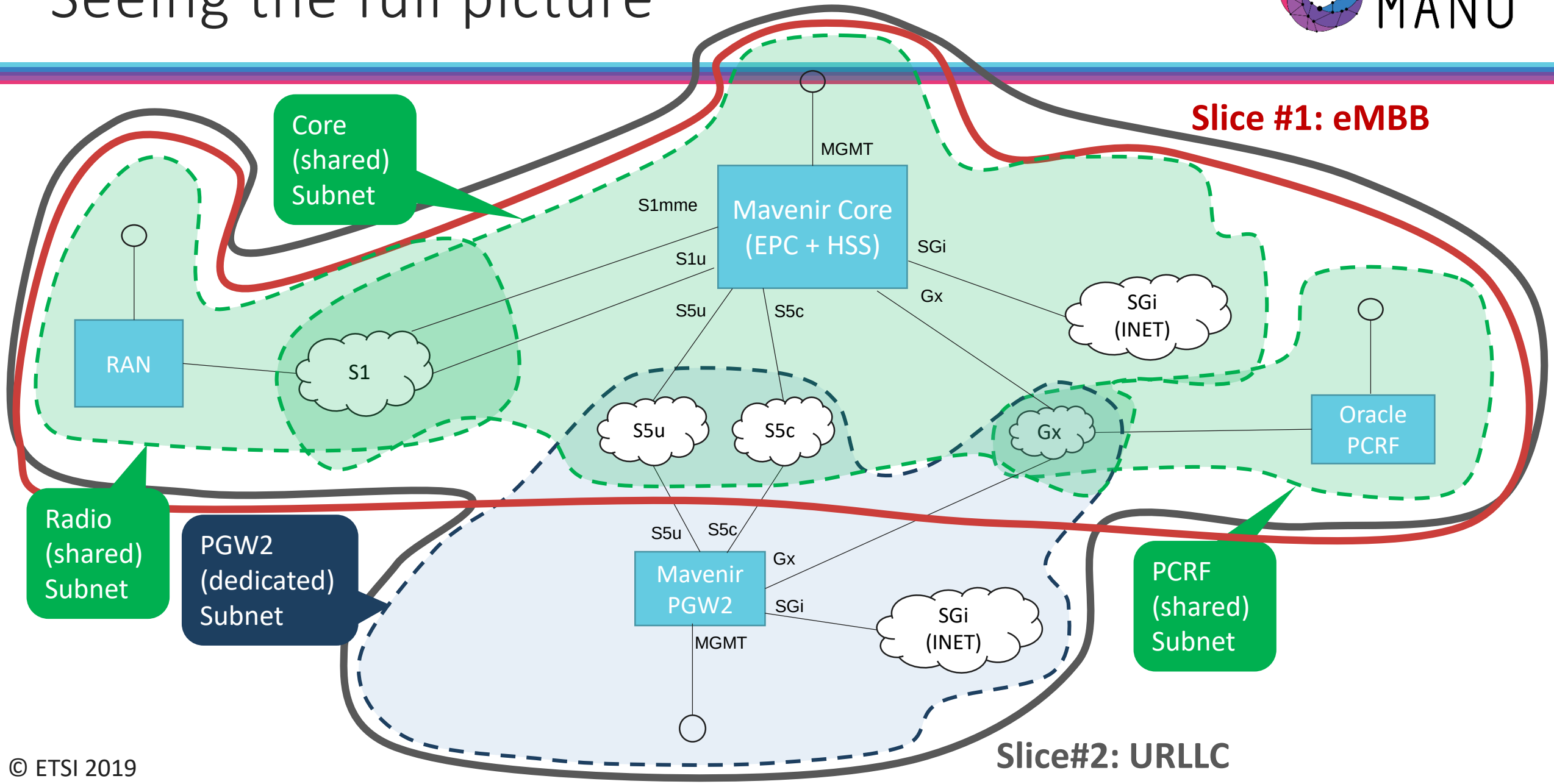

Open Source MANO

Demo 2: 5G Network Slices (PoC#6)

Key takeaways

- OSM is constantly incorporating best SW practices:
  - Microservice architecture
  - Proper decoupling of components depending on the NB operations
  - Multiple distribution options
- Deployment and management procedures of VNF, NS and Slices are encapsulated into packages (descriptor + artifacts)
- The main goal of PoC framework is to showcase OSM in real-world useful scenarios and use cases
- A PoC on 5G Network slices with OSM was recently showcased in MWC

Open Source MANO

Thank you!

Questions?

gerardo.garciadeblas@telefonica.com